Operational challenges of large scale Battery Energy Storage Systems for Grid applications

Contents…

1. Over view of BESS
2. Architecture of the BESS
3. Applications of BESS
4. Operational challenges
5. Conclusion

Technical specification of BESS Pilot project

Parameters	Li-ion Battery (BESS-I)	Advanced lead Acid Battery (BESS-II)
Capacity	250 kWh	250 kWh
Power	500kW for half-hour	500kW for half-hour
Charging rate	3 hrs. from rated DoD to Full Capacity	3 hrs. from rated DoD to full capacity
DC-DC Round-trip efficiency	>90%	>80%
Service Life	10 years	10 years
Life-cycle	4000 cycles (900 MWh)	3000 cycles (675 MWh)

Battery Energy Storage System Architecture

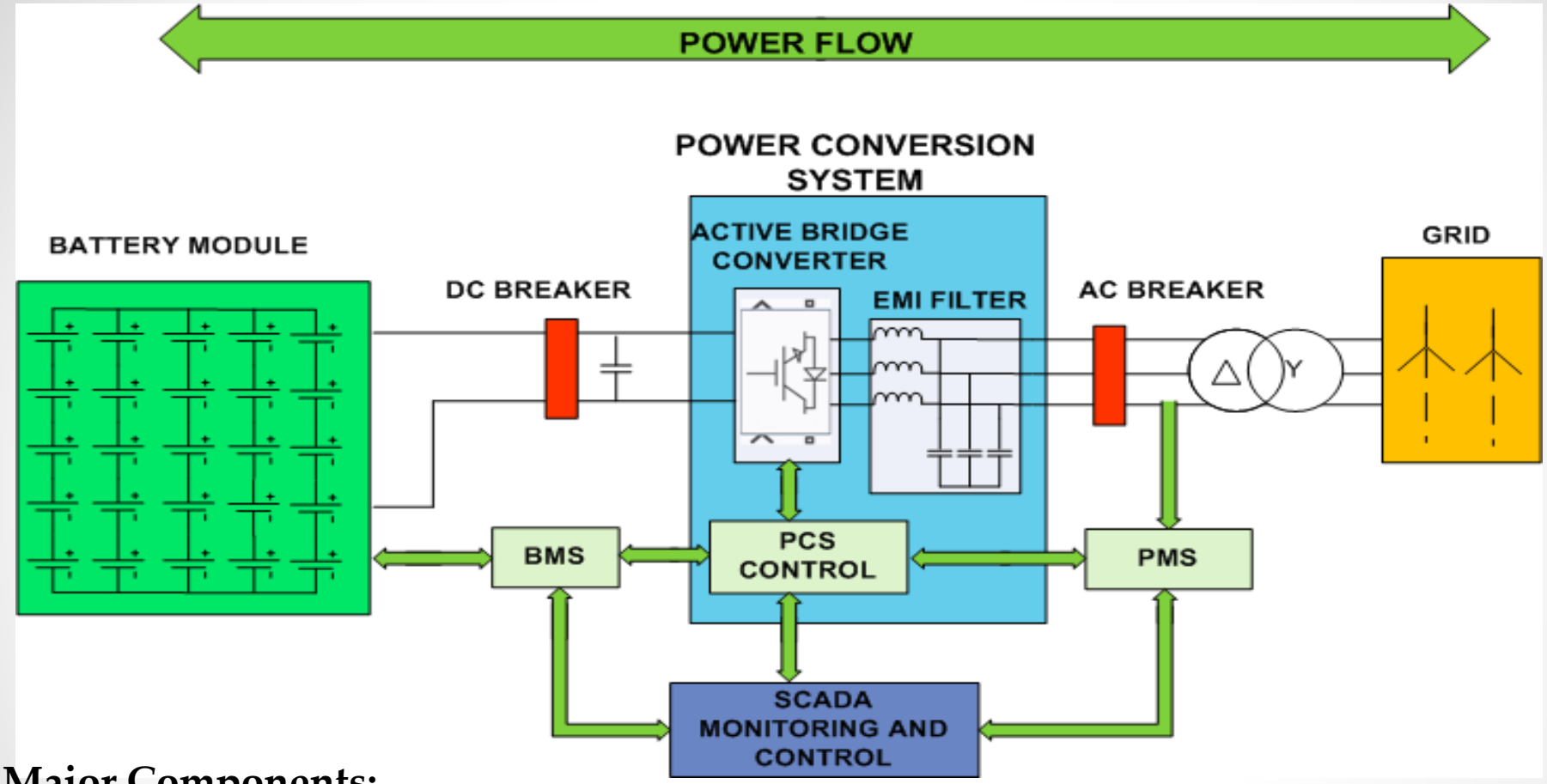

Major Components:

1. Battery Modules 2. Battery Management System

3. Power Conversion System 4. Power Management System

5. Bay Control Unit

System Configuration: Lithium Ion

Internal Chemistry: Cathode- Lithium Iron Phosphate, Anode- Carbon & Electrolyte - Lithium Hexafluorophate and solution of carbonates

Details of Each Cell: 3.2 V, 80 Ah.

Configuration: Battery Module -2 cells in parallel, 6 such units in series (19.2 V, 150Ah). One String-36 modules in series. (432 cells, 691.2 V & 150 Ah), 4 such strings in Parallel (1728 cells, 691.2 V, 600 Ah)

PCS Efficiency: 96%

Total Capacity of Battery: 398 kWh(useful capacity at 2C 357 kWh)

Rated DoD: 70%

System Configuration: Adv. Lead Acid

Internal Chemistry: Cathode-PbO_2, Anode-(Lead+Carbon),Electrolyte-H_2SO_4

Details of Each Cell: 2V, 600 Ah

Configuration: Two strings are connected in parallel, each string comprises of 300 cells connected in series (total 600 cells)

PCS Efficiency: 96%

Total Capacity of Battery: 691.2 kWh (useful Capacity at 2C was found 384 kWh)

Rated DoD: 65.1%

Functionalities

- **Under operation:**
  - Frequency Regulation
  - Energy Time Shift

- **Under implementation:**
  - Dynamic Frequency Regulation
  - RE capacity firming
  - Load following
  - Renewable Peak shaving
  - Voltage /Reactive power support
  - Integrated applications

Frequency Regulation

Based on the Grid Frequency variation, Battery system shall be charged / Discharged as per configured settings.

	Frequency range
Discharging mode	**<49.95 Hz**
SoC control	**49.95 to 50 Hz**
Charging mode	**>50 Hz**
SoC Band	**0.05 Hz**

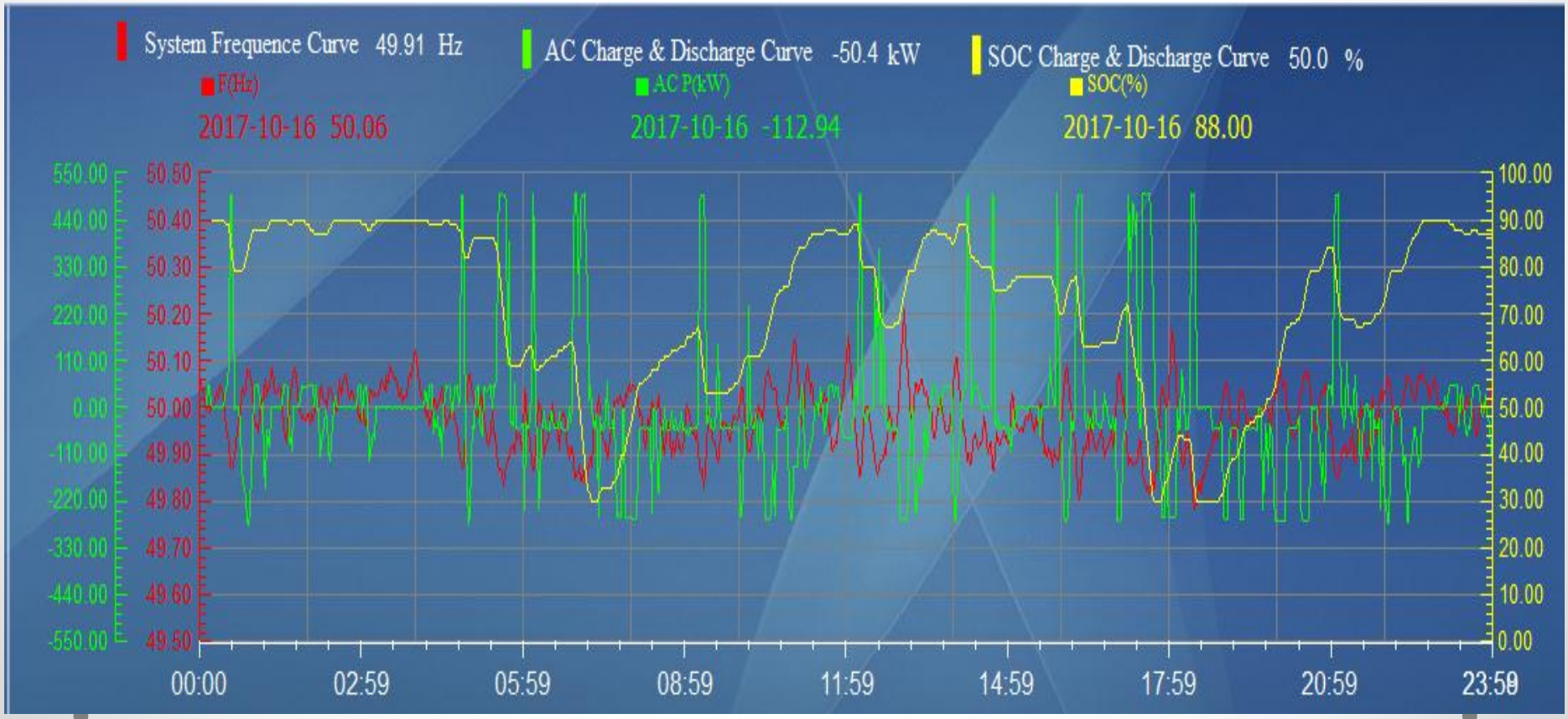

Energy Time Shift

S. No	Duration	KW	Status
1	01:00 - 5:00	200	Charging
2	7:00 - 7:30	200	Discharging
3	7:30 - 8:30	300	
4	8:30 -9:00	200	
5	10:00 - 12:00	100	Charging
6	13:00 - 14:30	200	
7	15:00 - 17:00	300	
8	18:00 - 19:00	300	Discharging
9	19:00 - 20:00	200	
10	23:00 - 24:00	100	Charging

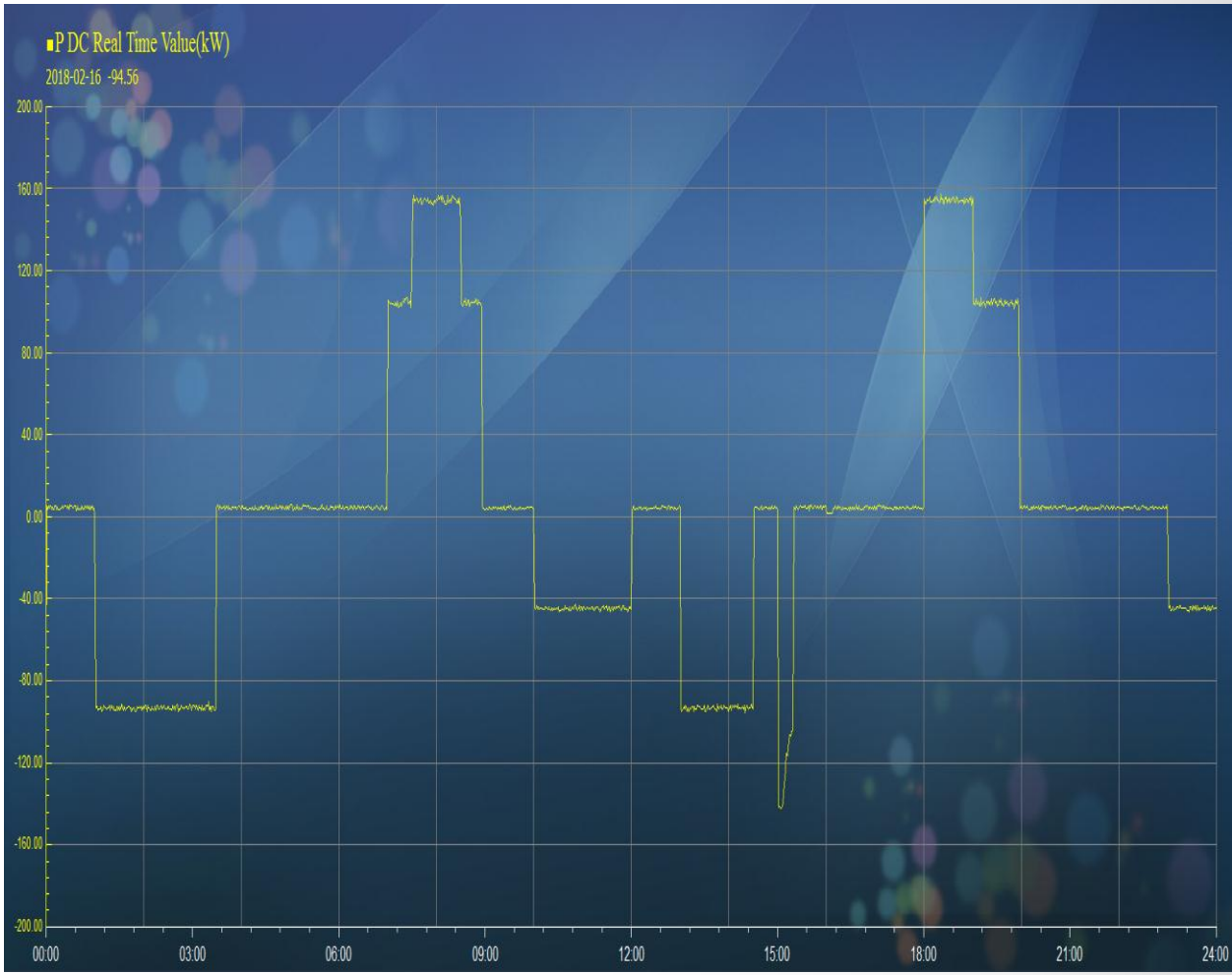

Operational challenges

- Battery life degrades due to the continuous utilization during the grid applications. The stress from the continuous operation of the battery accelerates the aging process and it will reach its end of life before completing the lifetime

- If the system operates continuously under ancillary services (FR application), after certain period of time, majority of cells lose its capability of response for sudden change in cha

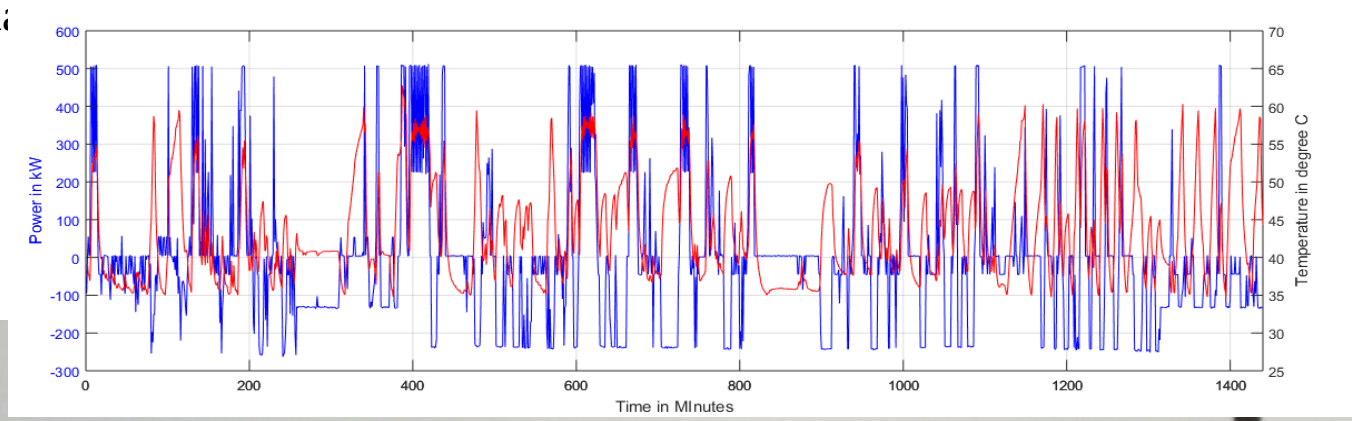

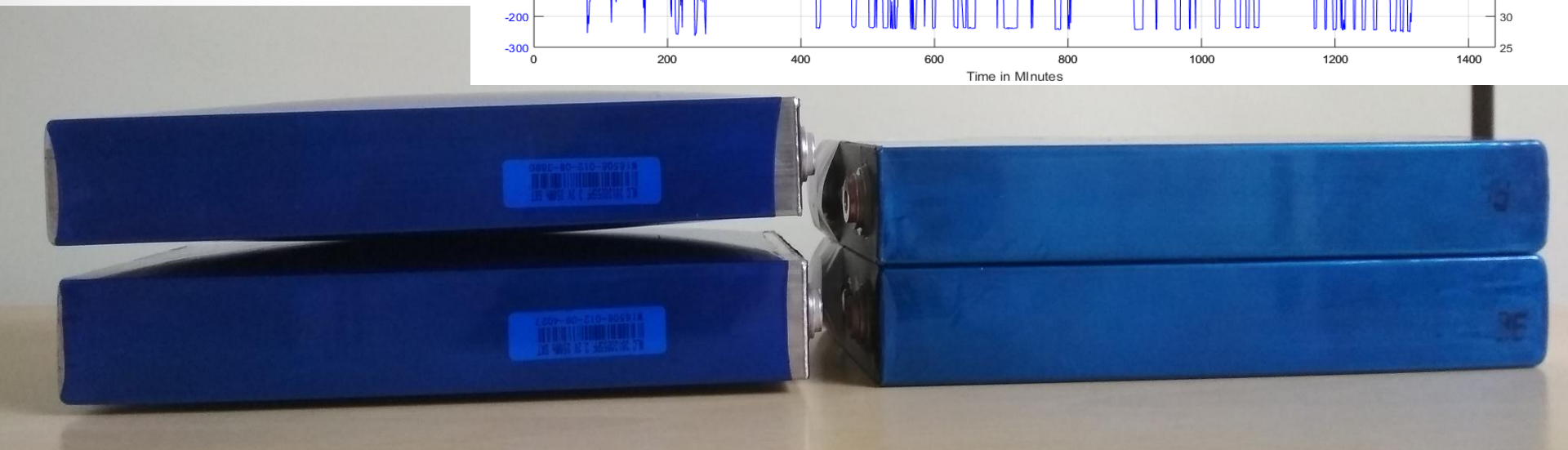

Operational challenges…

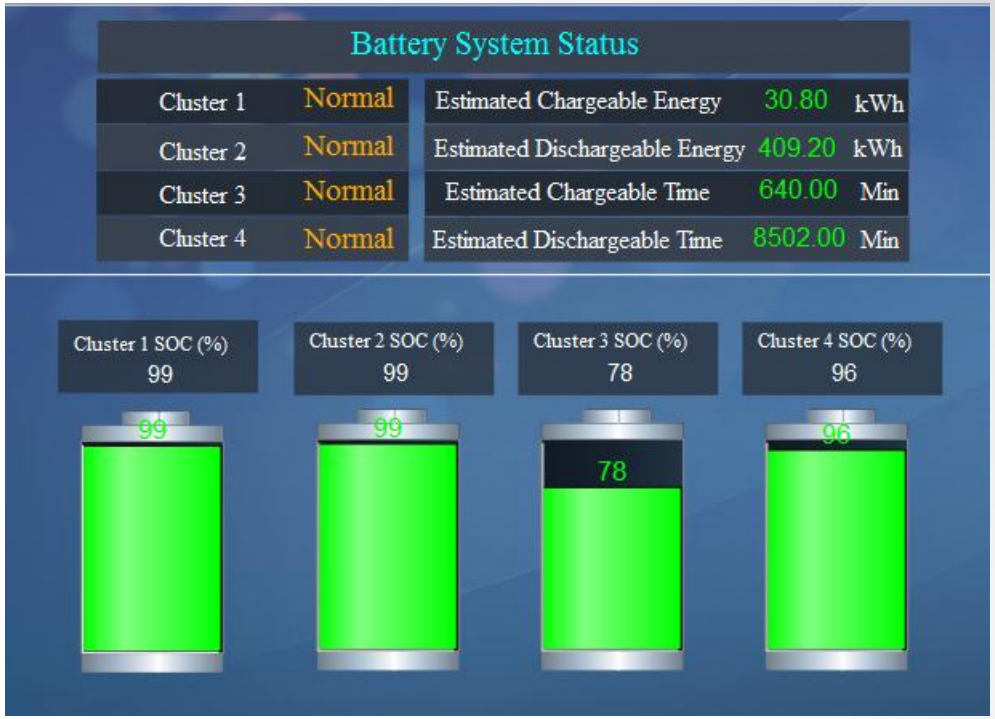

- Proper cell balancing taken care by BMS by monitoring individual cell voltage, temperature and SOC. Hence effective BMS system is recommended for efficient operation of BESS.

- Pre-estimation of faulty cell is critical requirement as when the BESS operates for critical applications such as ancillary services. If the particular cell fails during ancillary service operation, the entire battery clusters under down condition until replacement of the faulty cell, which will impact the economic viability of the system. Hence, effective forecasting of cell failure is important for any BESS project.

Conclusion

Increasing penetration of uncertain and intermittent renewable energy sources such as solar and wind can cause various problems in grid such as dynamic frequency, voltage fluctuations and demand-supply imbalance.
In countries such as India, where has an ambitious target of adding 175GW RE generation to the grid by 2022, may bring more challenges to the grid operators for sustainable and reliable grid operations. However, a fast responding storage device such as Battery Energy Storage System (BESS) could be used to mitigate these problems in real time operation of power system by providing various grid applications including Frequency Regulation, Energy time shift and RE firming etc.

This paper discussed about real time operational challenges of large scale BESS integrated with grid applications. A real case of installation of 1MW capacity of Li-ion and Advanced Lead Acid batteries initiated by POWERGRID has been considered for the study. Recommendations made based on performance of battery systems and real time system performance.

पावरग्रिड

Thank you